TELEDYNE LECROY
Everywhereyoulook™

Z400q Thor

Ethernet traffic generator for testing 7 speeds up to 400Gbps via QSFP-DD/QSFP56/QSFP28/QSFP+

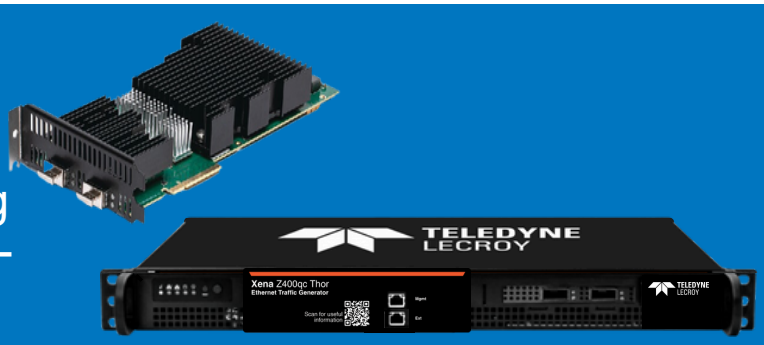

Key Features

- 7-speed flexibility: 400GE, 200GE, 100GE, 50GE, 40GE, 25GE and 10GE
- Dual media
- Supports both NRZ & PAM4 speeds
- Support for Auto-Neg & Link Training (AN/LT) interoperability tested
- Price/performance
- Ease of use

Find out more here:

The ZT400 Thor module can test seven Ethernet speeds - 400Gbps, 200Gbps, 100Gbps, 50Gbps, 40Gbps, 25Gbps and 10Gbps

This unique flexibility is provided via two physical transceiver cages – one supporting QSFP-DD/56/28/+ transceivers, and the other supporting QSFP56/28/+ transceivers.

The QSFP-DD cage can support the following speeds and ports: 1x400G, 1x200G, 1x100G, 2x100G, 4x100G, 4x50G, 2x40G, 8x25G, and 8x10G Ethernet test ports. The QSFP56 cage can support the same speeds except for 400G Ethernet and 4x100G Ethernet. Both cages can be active simultaneously except when the QSFP-DD cage runs 400GE or 4 x 100GBASE-DR.

Z400q Thor has the unique ability to test both NRZ & PAM4 speeds, plus perform Auto-Negotiation and Link Training (AN/LT) with a comprehensive level of interoperability testing.

The result is a highly versatile solution for performance and functional testing of network infrastructure and Ethernet equipment that support 400GE including switches, routers, NICs, TAPs, packet-brokers, and backhaul platforms.

Z400 Thor is available in the XenaCompact chassis and in the B2400 chassis where it requires 3 slots - 2 slots for the Thor module + 1 slot for mandatory airflow guide.

PORT LEVEL FEATURES	
Interface category	• **QSSFP-DD:** 400G, 200G, 100G, 50G Ethernet • **QSFP56:** 200G, 100G, 50G Ethernet • **QSFP28:** 100G, 50G, 40G*, 25GE and 10G* Ethernet • **QSFP+:** 40G, 10G Ethernet ** Depending on transceiver capabilities*
Total number of test ports (software configurable)	1x400G, 2x200G, 4x100G, 8x50G, 2x40G, 8x25G and 8x10G Ethernet
Interface options	**QSFP-DD cage** — **Line Code** — **Standard** • 1 x 400GBASE-DR4/LR4/FR4. or — PAM4 — 802.3bs • 1 x 400GBASE-SR8/FR8/LR8/CR8, or — PAM4 — 802.3bs • 2 x 200GBASE-CWDM4 (dual CS connector),or — PAM4 — 802.3bs/802.3cd • 1 x 200GBASE-DR4/SR4/FR4/LR4/CR4, or — PAM4 — 802.3bs/802.3cd • 4 x 100GBASE-CR2, or 4 x 100GBASE-DR, or — PAM4 — 802.3cd • 2 x 100GBASE-SR2/CR2, 2 x 100GBASE-DR (dual CS connector) or — PAM4 — 802.3cd • 1 x 100GBASE-SR4/LR4/CR4/CWDM4, or — NRZ — 802.3bj • 8 x 50GBASE-SR/CR, or — PAM4 — 802.3cd • 4 x 50GBASE-SR/CR, or — PAM4 — 802.3cd • 4 x 50GBASE-SR2/LR2/CR2, or — NRZ — Consortium** • 2 x 40GBASE-SR4/LR4/CR4, or — NRZ — 802.3ba • 8 x 25GBASE-SR/LR/CR, or — NRZ — 802.3by/Consortium** • 8 x 10GBASE-SR/LR/CR — NRZ — 802.3ae Same as QSFP-DD minus support for 400G speeds, 2 x 200GBASE-CWDM4, 4 x 100GBASE-DR, 4 x 100GBASE-CR2 and 8 x 50GBASE-SR/CR. In addition the QSFP56 does currently not support 2 x 100GBASE-DR/SR2/CR2 **QSFP56 cage** Actual interface options depend on the capabilities of the inserted transceiver. Both cages can be active simultaneously except when the QSFP-DD cage runs 400GE, 2 x 200GBASE-CWDM4, 1 x 200GBASE-SR8, 4 x 100GBASE-DR or 8 x 50GBASE-SR/CR. Both cages must run with the same base interface configuration (e.g. 2 x 50G). Power capacity per QSFP-DD/QSFP56 cage: 15 watts. *** As defined by Ethernet Technology Consortium*
Auto Negotiation and Link Training	• IEEE 802.3 Clause 73, Auto-negotiation • IEEE 802.3 Clause 72, Link training
Forward Error Correction (FEC)	• RS-FEC (Reed Solomon) (544,514,t=15), IEEE 802.3 Clause 119 (200/400GE) • RS-FEC (Reed Solomon) (528,514,t=7), IEEE 802.3 Clause 91 (100GE) • RS-FEC (Reed Solomon) (544,514,t=15), IEEE 802.3 Clause 134 (100GE/50GE 802.3cd) • RS-FEC (Reed Solomon) (528,514,t=7), IEEE 802.3 Clause 108 (25GE) • RS-FEC (Reed Solomon) (528,514,t=7), 25/50G Ethernet Consortium (25/50GE) • BASE-R FEC (Firecode) 2112,2080 IEEE 802.3 Clause 74 (25GE, 10GE)
Number of transceiver module cages	1xQSFP-DD/QSFP56/QSFP28/QSFP+ and 1xQSFP56/QSFP28/QSFP+
Port statistics	• Link state, FCS errors, pause frames, ARP/PING, error injections, training packet • All traffic: RX and TX Mbit/s, packets/s, packets, bytes • Traffic w/o test payload: RX and TX Mbit/s, packets/s, packets, bytes

АО Акметрон akmetron.ru

Adjustable Inter Frame Gap (IFG)	Configurable from 16 to 56 bytes, default is 20B (12B IFG + 8B preamble)
Transmit line rate adjustment	Ability to adjust the effective line rate by forcing idle gaps equivalent to -1000 ppm (increments of 10 ppm)
Transmit line clock adjustment	From -100 to 100 ppm in steps of 0.001 ppm (shared across all ports)
ARP/PING	Supported (configurable IP and MAC address per port)
Field upgradeable	System is fully field upgradeable to product releases (FPGA images and software)
Tx disable	Enable/disable of optical laser or copper link
IGMPv2 multicast join/leave	IGMPv2 continuous multicast join, with configurable repeat interval
Histogram statistics	Two real-time histograms per port. Each histogram can measure one of RX/TX packet length, IFG, or latency distribution for all traffic, a specific stream, or a filter
Loopback modes	• L1RX2TX – RX-to-TX, transmit byte-by-byte copy of the incoming packet • L2RX2TX – RX-to-TX, swap source and destination MAC addresses (*only at 10G) • L3RX2TX – RX-to-TX, swap source and destination MAC addresses and IP addresses (*only at 10GE) • TXON2RX – TX-to-RX, packet is also transmitted from the port • TXOFF2RX – TX-to-RX, port's transmitter is idle • Port-to-port – Inline loop mode where all traffic is looped 100% transparent at L1 (All rates except 40 GE)
Oscillator characteristics	• Initial Accuracy is 3 ppm • Frequency drift over 1st year: +/- 3 ppm (over 15 years: +/- 15 ppm) • Temperature Stability: +/- 20 ppm (Total Stability is +/- 35 ppm)

400/200/100/50/40/25/10GE FRAMED PRBS AND PCS/PMA LAYERS	
Payload Test pattern	PRBS-7, PRBS-9, PRBS-10, PRBS-11, PRBS-13, PRBS-15, PRBS-20, PRBS-23, PRBS-31, PRBS-49, PRBS-58
Error Injection	Manual single shot bit-errors
Alarm	Pattern loss
Error analysis	Bit-errors: count, rate
PCS virtual lane configuration	User-defined skew insertion per Tx virtual lane, and user defined virtual lane to SerDes mapping for testing of the Rx PCS virtual lane re-order function
PCS virtual lane statistics	• Relative virtual lane skew measurements (up to 2048 bits) • PAM4: Corrected Bit error, Pre-FEC BER • NRZ, No FEC: sync header and PCS lane marker error counters, indicators for loss of sync header and lane marker
FEC Total statistics	Total corrected FEC symbols, Total uncorrected FEC symbols, Estimated Pre-FEC BER, Estimated Post-FEC BER, Pre-FEC Error Distribution Graph
Link Flap	Single short or repeatable link down events with ms precision
Error Injection (PMA Layer)	Repeatable error inject periods at PMA layer with ms precision

TRANSMIT ENGINES	
Number of transmit streams per port	256 (wire-speed). Each stream can generate millions of traffic flows through the use of field modifiers
Test payload insertion per stream	Wire-speed packet generation with timestamps, sequence numbers, and data integrity signature optionally inserted into each packet.
Stream statistics 1)	TX Mbit/s, packets/s, packets, bytes, FCS error
Bandwidth profiles	Burst size and density can be specified. Uniform and bursty bandwidth profile streams can be interleaved
Field modifiers	16-bit or 32-bit header field modifiers with inc, dec, or random mode. Each modifier has configurable bit-mask, repetition, min, max, and step parameters. 8 (100G/50G PAM4: 2) 16-bit modifiers per stream or 4 (100G/50G PAM4: 1) 32-bit modifiers per stream
Packet length controls	Fixed, random, butterfly, and incrementing packet length distributions from 60 (in 10G: 56) to 12288 bytes
Packet payloads (basic)	Repeated user specified 1 to 18B pattern, an 8-bit incrementing pattern
Extended payload	Fixed full custom payloads can be generated for each stream with payload sizes up to 12288 bytes
Error generation	Undersize length (60 bytes min, at 10G min 56 bytes) and oversize length (12288 bytes max.) packet lengths, injection of sequence, misorder, payload integrity, and FCS errors
TX packet header support and RX autodecodes	Ethernet, Ethernet II, VLAN, ARP, IPv4, IPv6, UDP, TCP, LLC, SNAP, GTP, ICMP, RTP, RTCP, STP, MPLS, PBB, or fully specified by user
Pause Frames	NRZ rates: Responds to incoming pause and PFC (Priority-based Flow Control) frames
Packet scheduling modes	• Normal (stream interleaved mode) – standard scheduling mode, precise rates, minor variation in packet inter-frame gap. • Strict Uniform – new scheduling mode, with 100% uniform packet inter-frame gap, minor deviation from configured rates. • Sequential packet scheduling (sequential stream scheduling). Streams are scheduled continuously in sequential order, with configurable number of packets per stream. • Burst. Packets in a stream are organized in bursts. Bursts from active streams form a burst group. The user specifies time from start of one burst group till start of next burst group.

RECEIVE ENGINE	
Number of traceable Rx streams per port	2016 (wire-speed)
Automatic detection of testpayload for received packets	Real-time reporting of statistics and latency, loss, payload integrity, sequence error, and misorder error checking
Jitter measurement	Jitter (Packet Delay Variation) measurements compliant to MEF10 standard with 8 ns accuracy. Jitter can be measured on up to 32 streams
Stream statistics	• RX Mbit/s, packets/s, packets, bytes. • Loss, payload integrity errors, sequence errors, misorder errors • Min latency, max latency, average latency • Min jitter, max jitter, average jitter
Latency measurements accuracy	±32 ns
Latency measurement resolution	8 ns (Latency measurements can calibrate and remove latency from transceiver modules)
Number of filters:	• 6 (100G/50G PAM4: 4) x 64-bit user-definable match-term patterns with mask, and offset • 6 (100G/50G PAM4: 4) x frame length comparator terms (longer, shorter) • 6 (100G/50G PAM4: 4) x user-defined filters expressed from AND/OR'ing of the match and length terms.
Filter statistics	Per filter: RX Mbit/s, packets/s, packets, bytes.

CAPTURE	
Capture criteria	All traffic, stream, FCS errors, filter match, or traffic without test payloads
Capture start/stop triggers	Capture start and stop trigger: none, FCS error, filter match
Capture limit per packet	16 – 12288 bytes
Wire-speed capture buffer per port	• 384 kB for 400GE • 192 kB for 200GE • 96 kB for 100GE • 48 kB for 50GE • 48 kB for 40GE • 32 kB for 25GE • 16 kB for 10GE

ADVANCED PHY FEATURES	
Equalization Controls	• Tx Transmit Equalization Controls • Pre-emphasis • Tx Attenuation • Tx Post-emphasis Signal Integrity Analysis • Optional Auto-Tune of Rx equalizer/CTLE
Signal Integrity Analysis	FEC error correction chart

One module - multiple options

The Z400 Thor has 2 transceiver cages. The type of transceiver that is used, determines the speeds and number of ports you can use. The port number / speed configuration must be the same for both cages.

This is defined using XenaManager, the traffic generation and analysis software provided by Teledyne LeCroy Xena with all Xena test systems.

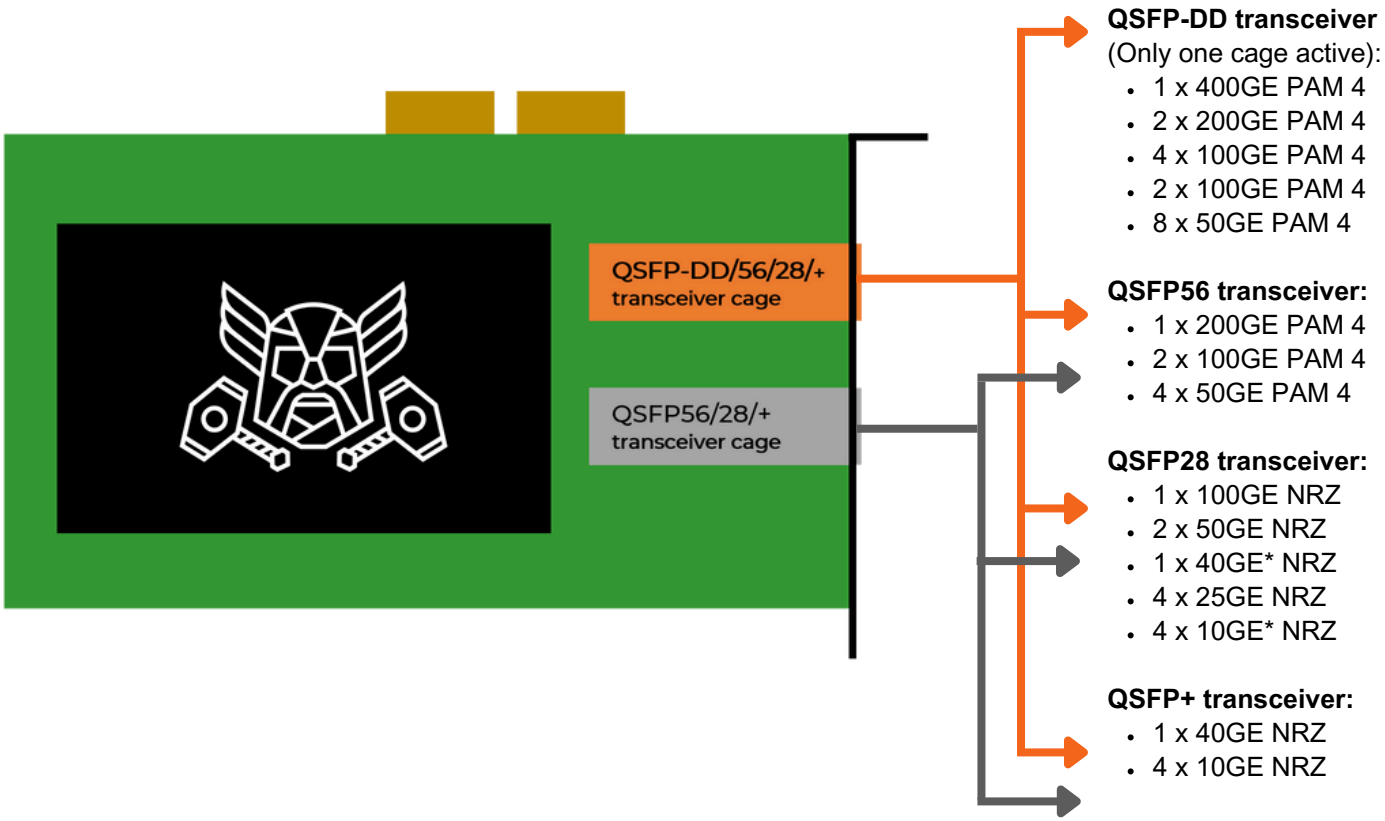

** Depending on transceiver capabilities*

HW SPECIFICATIONS	
Max. Power	174W
Weight	2.31 lbs (1.05 kg)
Environmental	• Operating Temperature: 10 to 30º C • Storage Temperature: -40 to 70º C • Humidity: 8% to 90% non-condensing
Regulatory	FCC (US), CE (Europe)
Notes	• This module is only supported by the B2400 chassis • This module requires 3 slots in the B2400 - 2 slots for the Thor module + 1 slot for mandatory airflow guide.

Ordering Information

Product Description	Product Code
• Z400qc Thor XenaCompact 1U chassis with 400GE 7-speed, 1 port QSFP-DD/QSFP56/QSFP28/QSFP+	C-Thor-400G-7S-1P
• Z400q Thor 400GE 7-speed, 1 port test module QSFP-DD/QSFP56/QSFP28/QSFP+	Thor-400G-7S-1P

Local sales offices are located throughout the world. Visit our website to find the most convenient location.

1-800-5-LeCroy • teledynelecroy.com

TELEDYNE LECROY
Everywhereyoulook™

© 2024 Teledyne LeCroy Inc. All rights reserved. Specifications, prices, availability and delivery subject to change without notice. Product brand or brand names are trademarks or requested trademarks of their respective holders. 21-10-2025

АО Акметрон akmetron.ru